5th European Conference on Turbomaschinery -
Fluid Dynamics and Thermodynamics
in Prague in March 2003

„Secondary flow control on compressor blades to improve the performance of axial turbomachines“

R. Meyer, D.W. Bechert, W. Hage

German Aerospace Center (DLR);
Institute of Propulsion Technology; Department of Turbulence Research
Müller-Breslau-Str. 8; D-10623 Berlin; Germany
e-mail: robert.meyer@dlr.de

Abstract

An experimental investigation on the flow separation in the corner (i.e., “corner separation”) between a wall and a single wing in a windtunnel and in a highly loaded compressor cascade was performed. As a passive flow control device a single vortex generator placed in each corner on the wing or the guide vane reduces the corner separation considerably.

The experiments with the single wing were carried out for Reynolds numbers of Re= 0.2 x10^6 to 1.2 x10^6 in the low speed windtunnel of the Hermann-Foettinger-Institut of the Technical University of Berlin. With flow visualisation techniques it was shown that a significant reduction of the corner separation and an improvement of the two-dimensionality of the flow can be achieved with vortex generators. Force measurements of the wing profiles with vortex generators showed a lift increase and a drag reduction.

In order to extend the design of the vortex generators for an application in turbomachines, an experimental study is currently ongoing, which investigates the influence of the vortex generators on the loss behaviour of an aerodynamically highly loaded compressor cascade with NACA 65 K48 blades. Initial experiments with a compressor cascade at Ma = 0.67 and Re=0.56x10^6 show, using flow visualisation techniques, a significant reduction of the corner separation on the guide vane and the wall.

Nomenclature

Wind tunnel investigations:			*Cascade investigations:*		
b	[m]	wing span	d	[m]	airfoil thickness
C_L	[-]	Lift coefficient	h	[m]	blade height
C_D	[-]	Drag coefficient	l	[m]	blade chord
h_{VG}	[mm]	Height of the VG	Ma	[-]	Mach number
l_μ	[m]	airfoil chord	Re	[-]	Reynolds number
l_{VG}	[mm]	length of the VG	u	[m]	circumferential coordinate
Re	[-]	Reynolds number	x	[m]	axial coordinate
x_{VG}	[mm]	distance between the VG leading edge and the airfoil leading edge	β_1	[°]	incoming flow angle
y_{VG}	[mm]	gap between the VG and the side wall	β_2	[°]	out going flow angle
α	[°]	angle of attack	βs	[°]	stagger angle
α_{VG}	[°]	angle between the VG and the local flow on the wing	δ_u	[°]	camber angle
φ_{VG}	[°]	angle of inclination of the VG			

Introduction

The flow separation in the corner between a wall and a blade (i.e., "corner separation") is a major source of loss in turbomachines. Such separations occur for example in a turbomachine in the corner between a guide vane and the casing or a blade and the hub.

We will show that this flow separation can be suppressed very effectively with a single **v**ortex **g**enerator (abbreviated VG) placed in each corner. The corner flow separation is caused by the interference between the boundary layer on the wall with that on the airfoil. A single vane type vortex generator placed in each corner on the wing turns out to be very efficient.

Vortex generators in the (airframe) aerodynamics of aircraft are already applied since the late nineteen-fifties. They are used for shock control on high speed airfoils and to prevent flow separation on the surface of wings, flaps, empennage and at the critical connection of the fuselage and the wing as well as on the engine nacelles and fairings.

In turbomachinery the use of vortex generators is not widespread. However, Law et. al. [1] successfully investigated the use of vortex generators for compressor casing treatment.

Windtunnel experiments

Experimental Setup

Experiments with a single wing were carried out in the windtunnel of the Hermann-Foettinger-Institute at the Technical University of Berlin. The maximum velocity speed was 45 m/s. Three different profiles with a chord length from 0.2m to 0.5m and a span of 1.55m in the channel were measured. A force balance permits an exact measurement of the lift and the drag forces on the wing. At the side walls there is a fully developed turbulent boundary layer whose thickness could be varied.

Corner separation takes place due to interaction of the wing boundary layer and the positive pressure gradient in the rear part of the wing (Fig. 1a). A single vortex generator (Fig. 1b) placed in each corner on the wing can suppress the corner separation [2], [3], [4], [5]. Fig. 2 shows an enlargement of such a vortex generator. This vortex generator is inclined to the flow (see Fig. 1b).

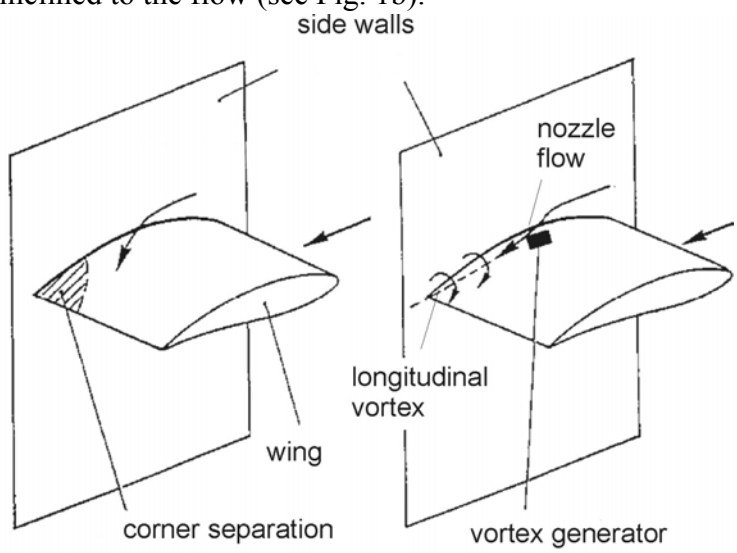

Fig. 1:

a) wing with corner separation

b) wing with vortex generator

Fig. 2: Vortex generator on the wing

The mechanism of the vortex generator

Two mechanisms make the vortex generator so successful: The inclination φ_{VG} and its angle of incidence α_{VG} causes a nozzle flow (fig. 1b), which is directed into the corner region. Secondly a longitudinal vortex is shed from the tip of the vortex generator, which produces a secondary flow on the surface of the main wing towards the wall. This pushes the separated flow to the wall. The longitudinal vortex results from the angle of incidence of the surface of the vortex generator for local incident flow and is comparable to the tip vortex of a wing. Both mechanisms cause that the high-energy flow from outside of the boundary layer flows into the corner region so that the flow can overcome the positive pressure gradient without separation.

Vortex generator geometry

The optimal dimensions of the vortex generator were determined experimentally. The configuration, with which the highest drag reduction was reached, was selected from several investigated configurations. Using titanium-oil flow images a configuration was selected such that the corner separation vanished. Fig. 3 shows the parameters which describe the geometry and the position of the vortex generator on the wing. The data associated with the windtunnel experiments can be found in the following table.

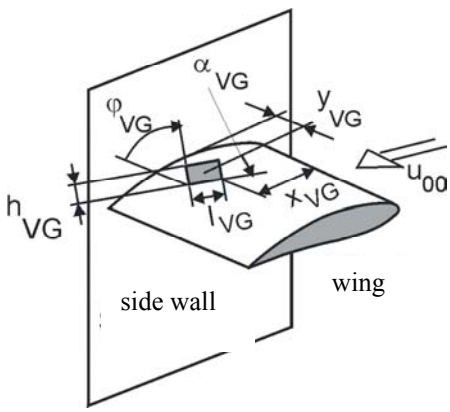

Fig. 3: Geometry, showing relevant notation of the vortex generator

l_μ = 0.5m	l_{VG} = 5% l_μ	α_{VG} = 14°	x_{VG} = 50% l_μ
b = 1.55m	h_{VG} = 2.4% l_μ	φ_{VG} = 45°	y_{VG} = 4% l_μ

Results

Fig. 4a shows the effect of the vortex generator on an FX-73-CL3-152 airfoil. The flow in the corner area between the wall and the wing is made visible with a titanium-oil flow visualisation. On the left hand side the separation in the corner is clearly visible. Fig. 4b shows, that the separation has vanished.

In Fig. 5 one can see the results of the force measurements. The double lines mark the different behaviour for an increasing and decreasing angle of attack. For low and high angles slight hysteresis are visible. It is important to note that, although the parasitic drag of a vortex generator is unavoidable, there is no net drag increase of the airfoil over the whole C_L/C_D-polar. At higher angles of attack, when the corner flow on the clean configuration is separated, the vortex generator reduces the drag and improves the lift considerably.

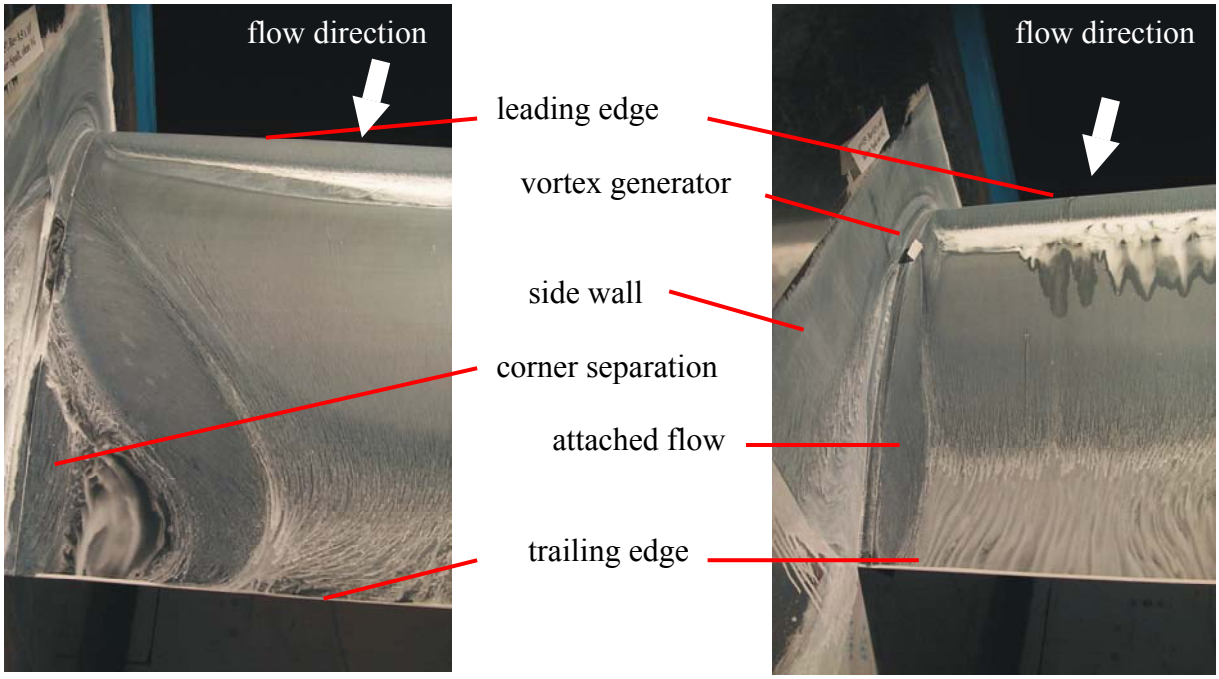

Fig. 4a: Flow visualisation of the FX-73-Airfoil; **Without** VG => corner separation; α=15°; Re=0.5x10^6

Fig. 4b: Flow visualisation of the FX-73-Airfoil; **With** VG; => attached flow in the corner Region; α=15°; Re=0.5x10^6

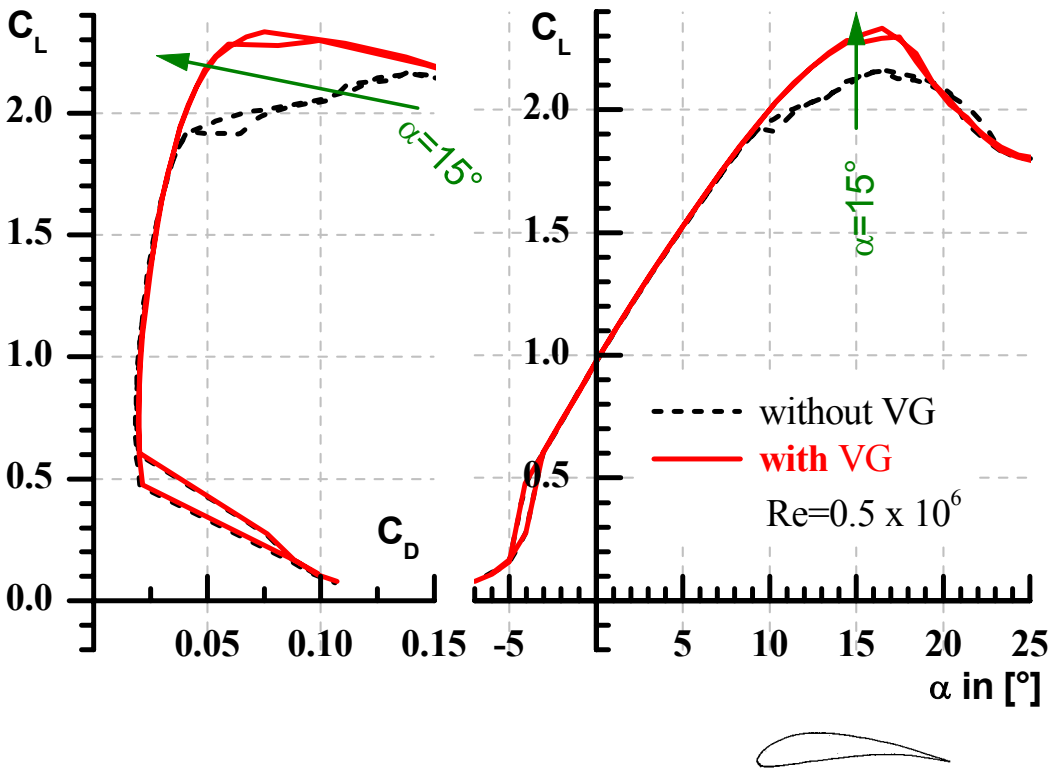

Fig. 5: Lift and drag polar from the force measurements of the FX-73-airfoil; l_μ=0.5m; Re=0.5x10^6

Experimental Setup of the Cascade experiments
High Speed Cascade Wind Tunnel
The experimental investigations were carried out at the high-speed wind tunnel (fig. 6) of the DLR (Institute of Propulsion Technology, Department of Turbulence Research) in Berlin.

Test-section

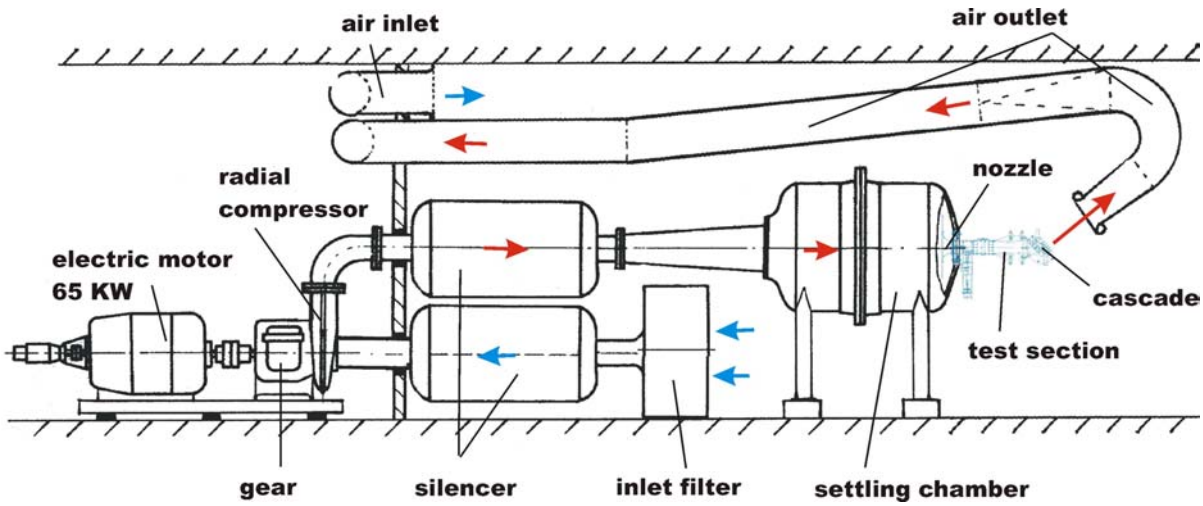

Fig. 6**: High speed wind tunnel connected to compressor cascade test-section**

The channel has a rectangular cross section of 40 mm width and 90mm height at the exit of the nozzle. For the high speed investigations a new cascade wind tunnel segment for incoming flow angle β_1=132°, and the Mach number 0.67 was developed. The Reynolds number is 0.56×10^6 (based on 40mm chord) and corresponds therefore to conditions found in an existing turbomachine (RB199). The aspect ratio (ratio of blade height and chord) is 1. This value is typical for modern highly loaded compressors and was selected in order to let the secondary flow effects dominate.

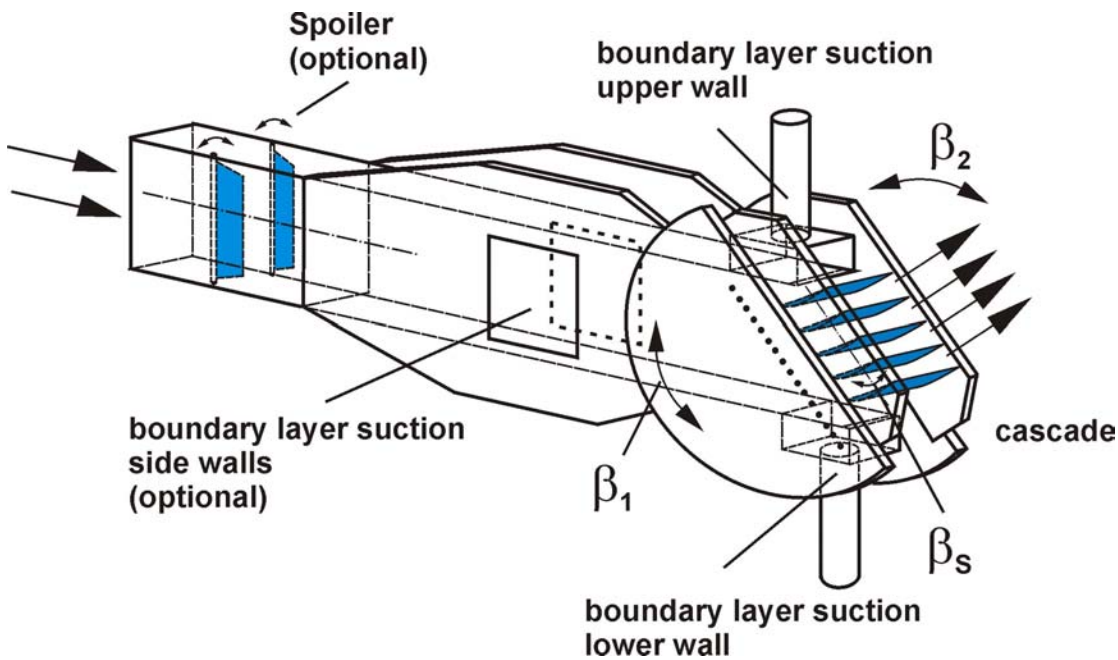

Fig. 7**:** Test section with cascade

The test section with the connected blade cascade has some special features, which permit the variation of several parameters (Fig. 7).

- The incoming flow angle β_1 can be adjusted separately from the stagger angle β_S.
- The boundary layer suction at all four channel walls can be adjusted separately.
- The suction at the upper and bottom walls allows the adjustment of the static pressure over the channel height. Thereby a homogeneous inflow according to an "infinite blade cascade" is achieved.

Another special feature of this particular test-section is the continuously adjustable boundary layer thickness of the side walls.

- The boundary layer thickness can be reduced by suction at the side walls.
- To increase the boundary layer thickness the optional spoiler section can be used.

Compressor Cascade

The compressor cascade used for the investigations is a compound of five blades with a chord length of 40mm. The profile is a 48° circle bow with a superimposed NACA 65 thickness distribution.

The compressor cascade represents therefore the highly loaded hub profile of a medium pressure axial compressor stage of the RB199 Tornado engine.

Measurements with the same cascade with the same shaping, but different chord have been previously published

[6], [7], [8], [9].

The main geometrical parameters and design flow conditions are shown in Fig. 8 and the following table.

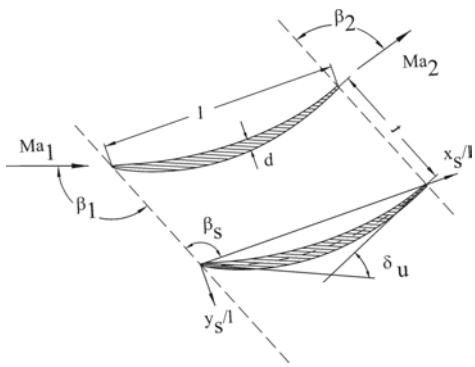

Fig. 8**:** The compressor cascade

$t / l = 0.55$	$Ma_1 = 0.67$
$d_{max} / l = 0.055$	$Re_1 = 0.56 \times 10^6$
$\delta_u = 48°$	$\beta_1 = 132°$
$\beta_s = 112.5°$	$\beta_2 = 96°$

The cascade is mounted in the test section as shown in Fig. 7 and Fig. 9.

The measurements focus on the centre blade of the cascade. In order to ensure an homogeneous inlet flow, boundary layer suction is applied to the upper and lower walls. To monitor the main incoming flow conditions the static pressure inlet pressure, the total inlet pressure and the total temperature in the settling chamber are measured.

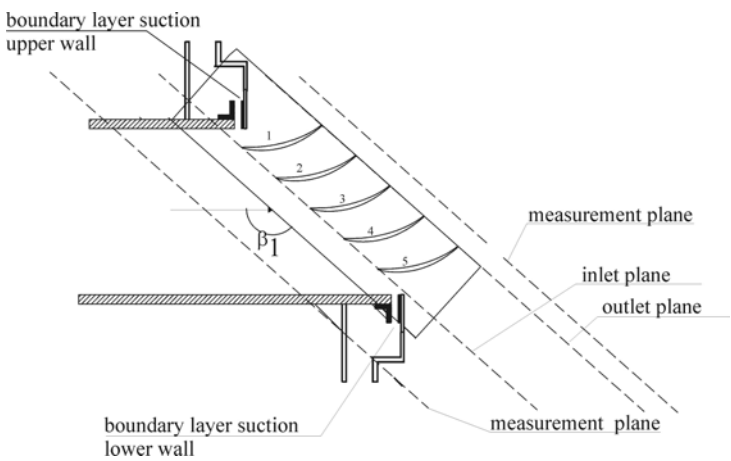

Fig. 9**:** Cascade mounted in the test section

Results of the flow visualisations

In a first series experiments with the new cascade segment flow visualisation images were produced. Fig. 10 shows the typical corner separation on the rear part of the suction side of the reference blades without any mounted vortex generators.

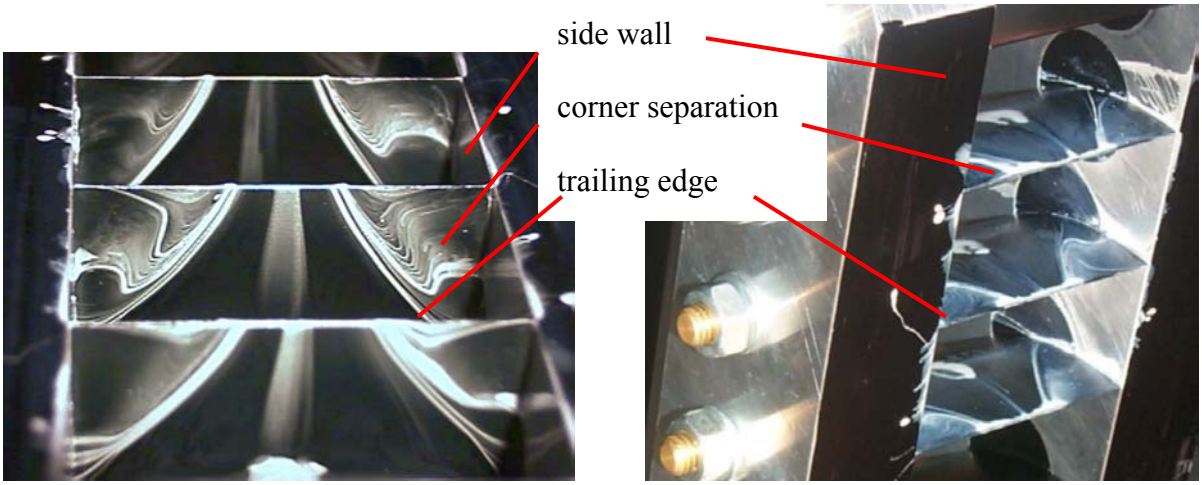

Fig. 10: Compressor cascade with corner separations, Ma=0.56; Re=0.56x10^6;

(view against the flow direction on the rear 60% part of the suction side of the blades)

A vortex generator was then mounted on the right hand side of the blades (Fig. 11). In the associated oil paint image (Fig. 12) on the right hand side a clear reduction of the corner separation is now recognisable. The left side without vortex generators shows still the strong corner separation.

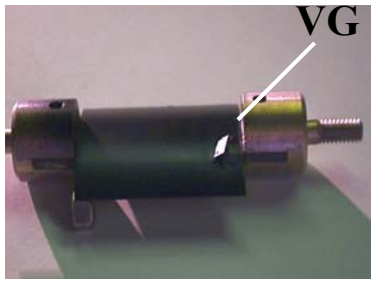

Fig. 11: Blade with one VG on the right side

Uninfluenced side (without VG):

corner separation

trailing edge

side wall

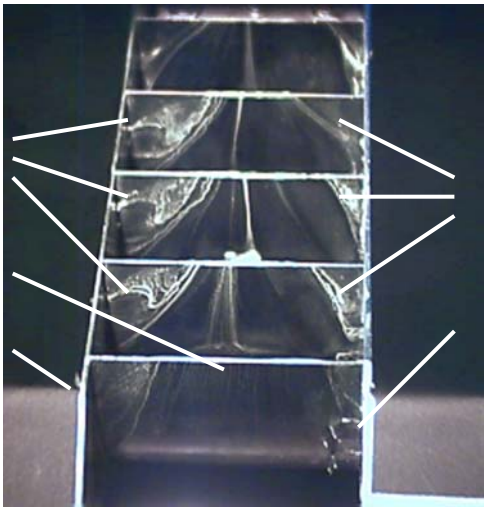

VG side:

reduced corner separation

side wall

Fig. 12: Flow visualisation images of the cascade ;
left side uninfluenced; right side influenced with VG's

(view against the flow direction on the rear 60% part of the suction side of the blades

In further experimental studies extensive variation of the geometry of the vortex generators are examined. In addition to flow visualisations, a wake measuring technique is used, which permits to measure the loss behaviour of the cascade with vortex generators in comparison with the reference cascade without vortex generators.

Acknowledgements
The investigations reported in this paper were performed within the project "Sekundärströmungsbeeinflussung in axialen Turbomaschinen zur Verbesserung des Stufenwirkungsgrades" supported in the "AG-Turbo" research program, sponsored by the German Federal Ministry of Economics and Technology.

References

[1] C.H. Law, A. J. Wennerstrom, W.A. Buzzell; SAE Paper 760925; Society of Automotive Engineers, Aerospace Engineering and Manufacturing Meeting, Nov. 29-Dec.2, 1976, 7p , San Diego, Calif., USA

[2] D. W. Bechert; European patent 99 114 975; AP 2/98; "Schaufelanordnung für eine Strömungsmaschine"; 1998; Germany

[3] W. Hage, D.W. Bechert, R.Meyer; "A novel use of vortex generators for separation control in the corner between a wall and a wing."; FLOWCON - IUTAM Symposium; Sep. 7-11. 1998; Göttingen; Germany

[4] R. Meyer, D.W. Bechert, W. Hage; "Separation control in corner flows and on airfoils"; DragNet European Drag Reduction Workshop; June 25-26 2001, Cranfield University, Bedford, UK;

[5] R. Meyer, et al. "Sekundärströmungsbeeinflussung von Eckenströmungen"; 10.STAB-Workshop (Flow and Separation); Nov 14-15 2001; Göttingen; Germany

[6] H. Scheugenpflug , "Theoretische und experimentelle Untersuchungen zur Reduzierung der Randzonenverluste hochbelasteter Axialverdichter durch Grenzschichtbeeinflussung", PhD Thesis, Universität der Bundeswehr München, 1990; Germany

[7] R. Watzlawick , "Untersuchungen der wesentlichen Einflussfaktoren auf die Sekundärverluste in Verdichter- und Turbinengittern bei Variation des Schaufelseitenverhältnisses", PhD Thesis, Universität der Bundeswehr München, 1991; Germany

[8] J. Hübner , "Experimentelle und theoretische Untersuchung der wesentlichen Einflussfaktoren auf die Spalt- und Sekundärströmung in Verdichtergittern", PhD Thesis, Universität der Bundeswehr München, 1996; Germany

[9] M. Boese, L. Fottner , "Effects of Riblets on the Loss Behavior of a Highly Loaded Compressor Cascade", Proceedings of ASME Turbo EXPO 2002; GT-2002-30438, Universität der Bundeswehr München, 2002; Germany